**WHELEN®**
**ENGINEERING COMPANY INC.**

*Route 145, Winthrop Road,*
*Chester, Connecticut 06412*
*Phone: (860) 526-9504*
*Fax: (860) 526-2009*
*Internet: www.whelen.com*
*Sales/Service e-mail: aviation@whelen.com*

# Installation Guide: Model A490ATSC P/N 01-0770062-03 Strobe Power Supply (FAA/PMA Approved)

## Specifications:

**Position Lights -**

**Current Draw**.....4.0 Amps @ 14 Volts D.C.
2.0 Amps @ 28 Volts D.C.
**Weight**.....1.7 lbs.
**Length**..... 5.00”
**Width**..... 3.12”
**Height** ..... 3.06”

**INSTALLATION PROCEDURES...**

### *Mounting Location*

1. Consider areas or locations designated by the aircraft manufacturer. Do not mount the strobe power supply closer than three (3) feet of the ADF loop.
2. For alternate locations, consider areas such as the cabin baggage compartment, the floor under the seat, non-structural bulkheads, firewalls, etc..
3. If necessary, fabricate support brackets or shelves, and attach them to the aircraft structure to provide a mounting surface that will withstand the inertia forces stipulated in chapters 1 & 3 of AC 43.13-2A.
4. An “IA” or other representative of the FAA must approve documentation of structural integrity of the fabricated installation.
5. When installing the strobe light power supply in an inverted position, drill a 3/16” diameter hole in the lowest corner of the cover to provide for moisture drainage. Care must be taken not to let the drill protrude into the power supply, for it will inflict damage to the electronic components.
6. Specifically call out the location of the strobe light power supply of FAA form 337.

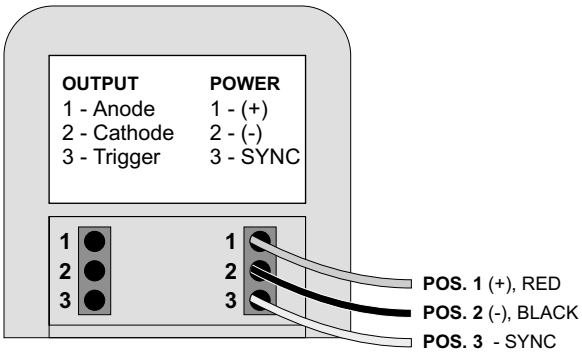


## Operation:

**This power supply will operate ONE strobe light head assembly at 34 joules of power. It is equipped to flash up to five (5) other like units simultaneously when an 18 gage wire is connected to outlet 3 on the input power connector.**

### *Wiring Instructions*

**WARNING! STROBE LIGHT POWER SUPPLIES ARE POLARITY SENSITIVE. REVERSING THE INPUT POLARITY WILL CAUSE SEVERE DAMAGE TO THE POWER SUPPLY!**

Steps below: “Ref. AC 43.13-1B, Chapter 11, Sections 1, 2, 3 & 7”.

1. Choosing wire size of A+ input lead, refer to Paragraph 444 “Electric Wire Chart” Figure 11.7 & 11.7A, with reference to “Strobe Light Model Current” requirement chart on page 6 & 11, and “Wire and Circuit Protection Chart” Figure 11.1.
2. Shielded wire is not generally necessary, but has proven effective in reducing the possibility of radio interference.
3. The power supply shall acquire its power from a low impedance source such as the alternator or generator end of the electrical buss **as close to the battery as possible.**
4. For penetrating pressure hull, refer to the aircraft service manual.
5. Check all avionics systems for interference.

Looking at the power supply connectors with the mounting plate flat on a bench, the left connector is the strobe outlet. The right connector is the power input and synchronization.

**Left Connector (Power Output)**
**Pin 1. (Top) -** RED wire/anode
**Pin 2. (Center) -** BLACK wire/cathode
**Pin 3. (Bottom)-** WHITE wire/trigger

**Right Connector (Power Input)**
**Pin 1. (Top) -** RED wire/13 to 30 volt, positive input
**Pin 2. (Center) -** BLACK wire/ground
**Pin 3. (Bottom)-** Synchronization pin/If synchronization is desired, connect an 18 gage wire between pin 3 on each power supply.

*Aviation*

©2001 Whelen Engineering Company Inc.
Form No.13610A (030303)

**INTERCONNECTING CABLE...**

1. The Whelen interconnecting cable shall be secured in place with approved aviation techniques.
2. The cable shall not parallel ADF, Gyro or Flux Gate compass leads closer than 12 inches.
3. CABLE COLORING CODING (see figure 3):

   **PIN 1 - RED** (Anode)
   **PIN 2 - BLACK** (Cathode)
   **PIN 3 - WHITE** (Trigger)
   **SHIELD -** Ground at power supply end only

**Caution:** **When pins 1 & 2 or pins 2 & 3 are reversed, the system will appear to operate normally, however this condition will cause premature flash tube failure.**

**IMPORTANT NOTE:**

Your new strobe power supply has an additional circuit built-in to prevent self-ionization (steady glowing) of the strobe tubes. In some cases, when replacing older power supplies, the bare shield wire in the existing harness is pinned together at each end with the black wire. The following modification must be made to ensure proper operation.

1. At the strobe tube end of the cable, cut the shield wire and tape it off (DO NOT CUT THE BLACK WIRE).
2. At the power supply end of the cable, cut the shield wire and connect it to a good ground (DO NOT CUT THE BLACK WIRE).
3. This must be done for each strobe light connection (see figure 3).

**Fig. 3** **PIN 1 = RED (ANODE)**
**PIN 2 = BLACK (CATHODE)**
**PIN 3 = WHITE (TRIGGER)**
**SHIELD = RFI DRAIN TO GROUND**

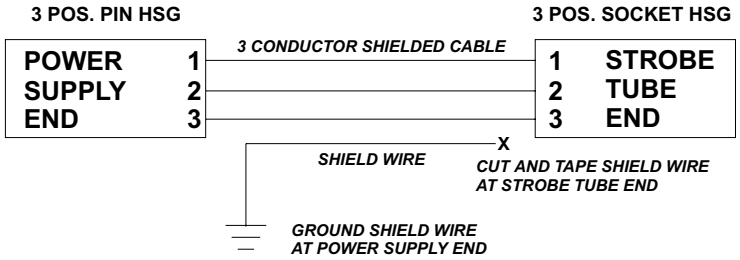


## INTERMIXING STROBE LIGHT SYSTEM EQUIPMENT

**OBSERVE COLOR AND PIN NUMBERS.** CABLES CONNECTING REMOTE POWER SUPPLY TYPE STROBE LIGHTS MUST BE CONNECTED CORRECTLY!

Whelen Engineering and Aero-flash wiring between light assemblies and remote power supplies are identical as pictured below.

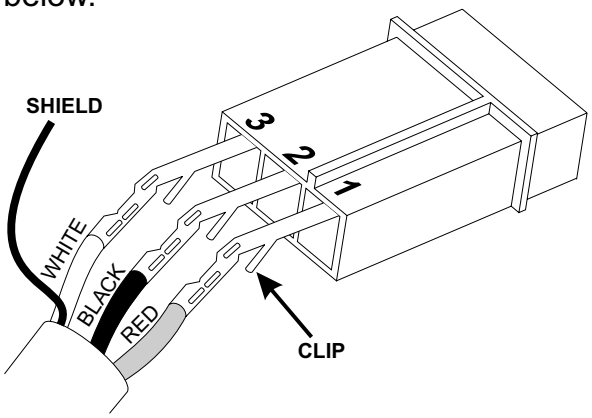


Grimes and SDI (Hoskins) wiring between light assemblies and remote power supplies are identical as pictured below.

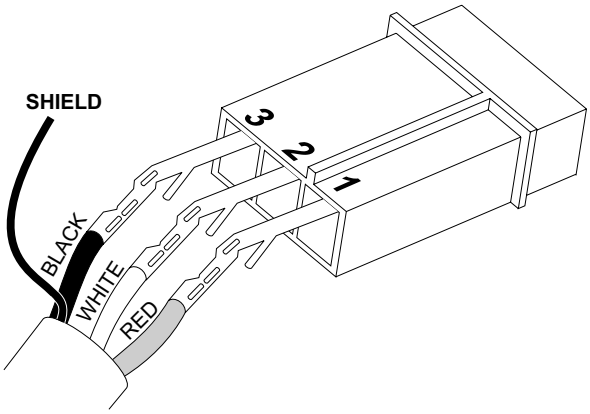


Both Grimes and SDI sometimes use MS (Cannon Type) Connectors:
**A** = RED (Anode), **B** = WHITE (Trigger),
**C** = BLACK (Ground)